3 pages specs.
2 sh. drgs.

20/96/2

French 8923

37910/3

N° 8.923 M. Chamarande Pl. unique

Del. May 12-1908

21. CARRIAGES & WAGONS
Ambulances and Stretchers

FRENCH PATENT

FIG.1. FIG.2.

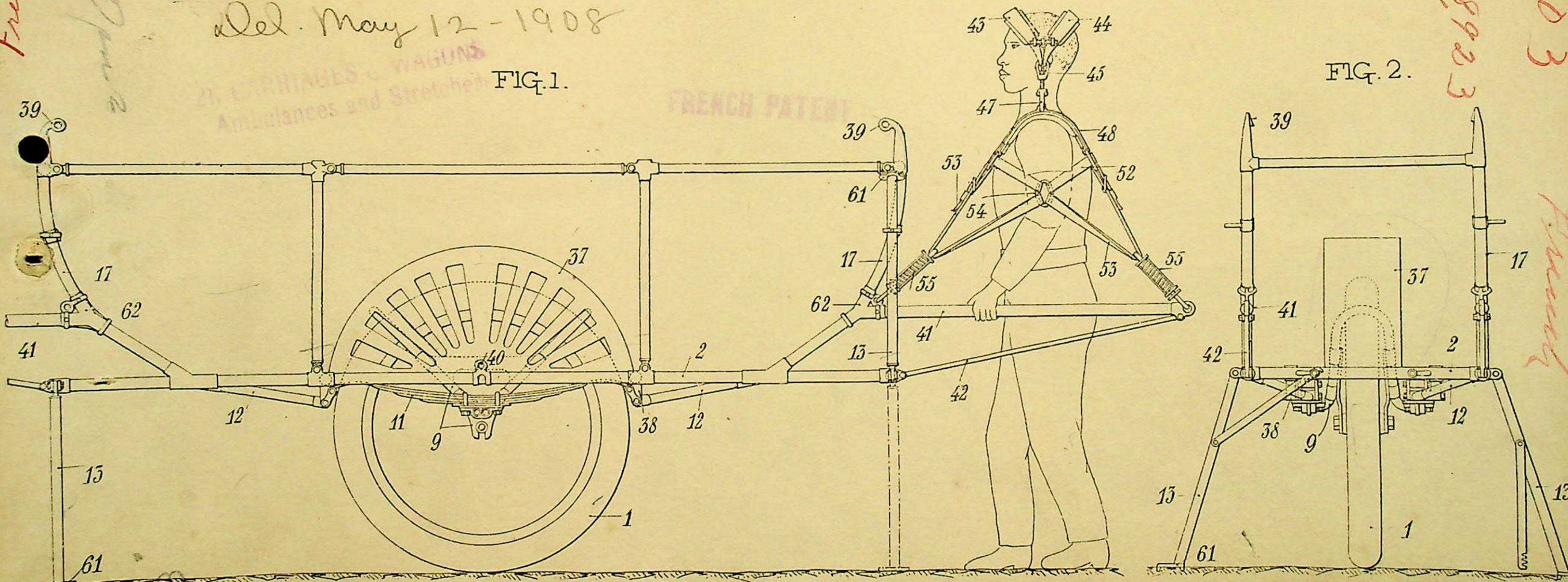

8,923

FIG. 5.

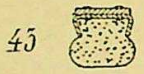

FIG. 3.

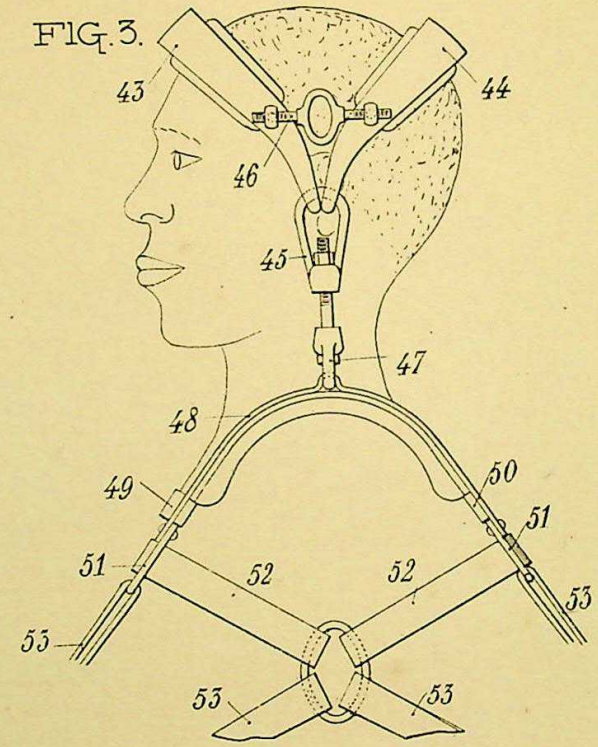

FIG. 4.

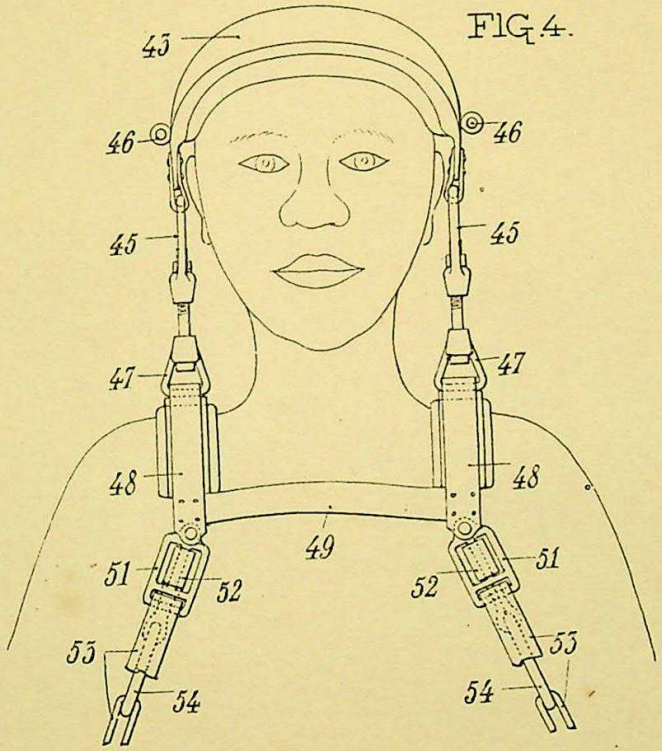

FIG. 6.

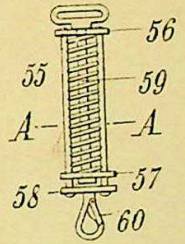

FIG. 7.

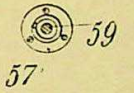

37,703
2 sheets 8,923

FIG. 1.

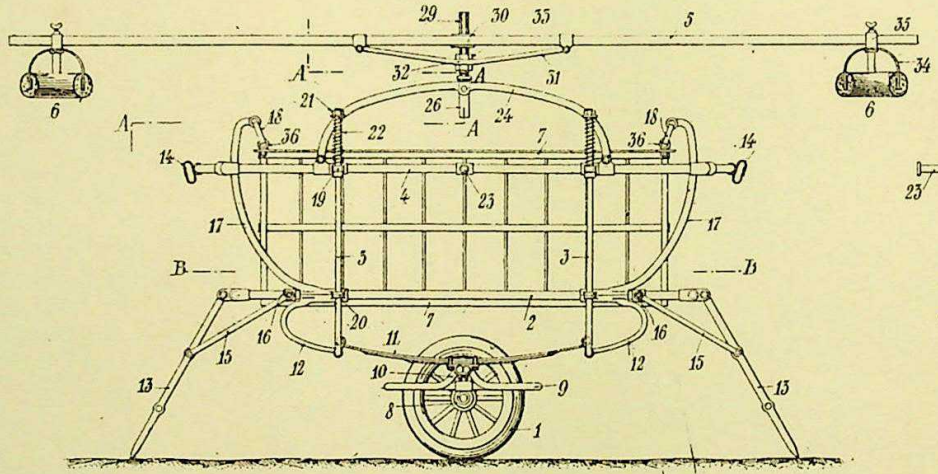

FIG. 3.

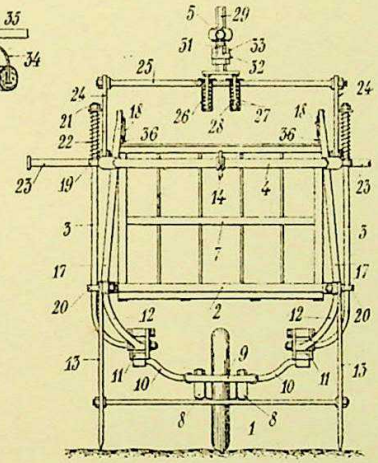

FIG. 2.

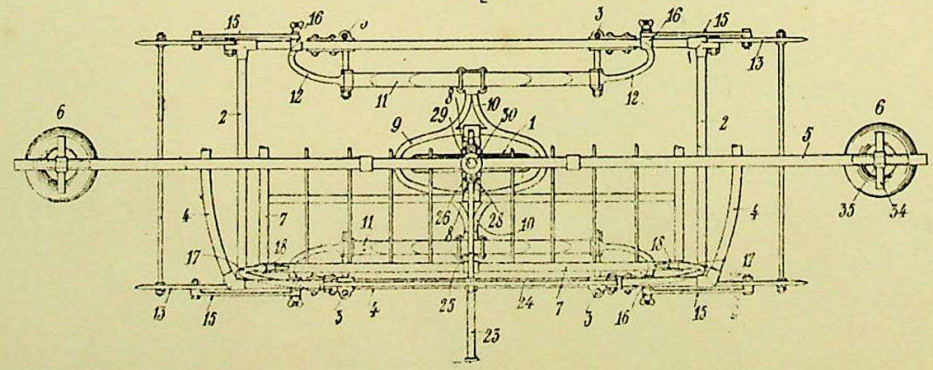

296/20
379103
12